EXPLODED VIEW & PARTS LISTING

Model: AD-10PH
Model #: 853326

Pulsation Dampener

To Purchase:
800-990-7867
sales@yamadapump.com
Find My Rep

More Information:
YouTube: @yamadapump
yamadapump.com
Data Sheets | CAD Drawings | Manuals
Literature | BOM | Performance Curves

Trial Program

REF. NO.	PART NO.	DESCRIPTION	QTY.	REORDER
1	710674	AIR CHAMBER	1	
2	771316	CUSHION	1	
3	708770	CENTER DISK	1	
4	771372	DIAPHRAGM	1	
5	687229	NUT	4	
6	631329	WASHER FLAT	10	
7	681300	SPRING WASHER	10	
8	772215	FLANGE	2	
9	643018	O RING	2	
10	771136	BALL GUIDE	1	
11	780270	VALVE SEAT	1	
12	795078	VALVE	1	
13	716405	VALVE SEAT	1	
14	802569	SILENCER	1	

REF. NO.	PART NO.	DESCRIPTION	QTY.	REORDER
16	640017	O RING	1	
17	710717	NUT	1	
18	710719	NUT	1	
19	681170	SILENCER	1	
20	714085	UNION	1	
21	710720	SPRING	1	
22	710757	CENTER ROD	1	
23	773092	THROAT BEARING	1	
24	630807	STOP RING	1	
26	714103	STUD	4	
27	770968	CENTER DISK	1	
30	780194	OUT CHAMBER	1	
31	682945	BOLT	2	

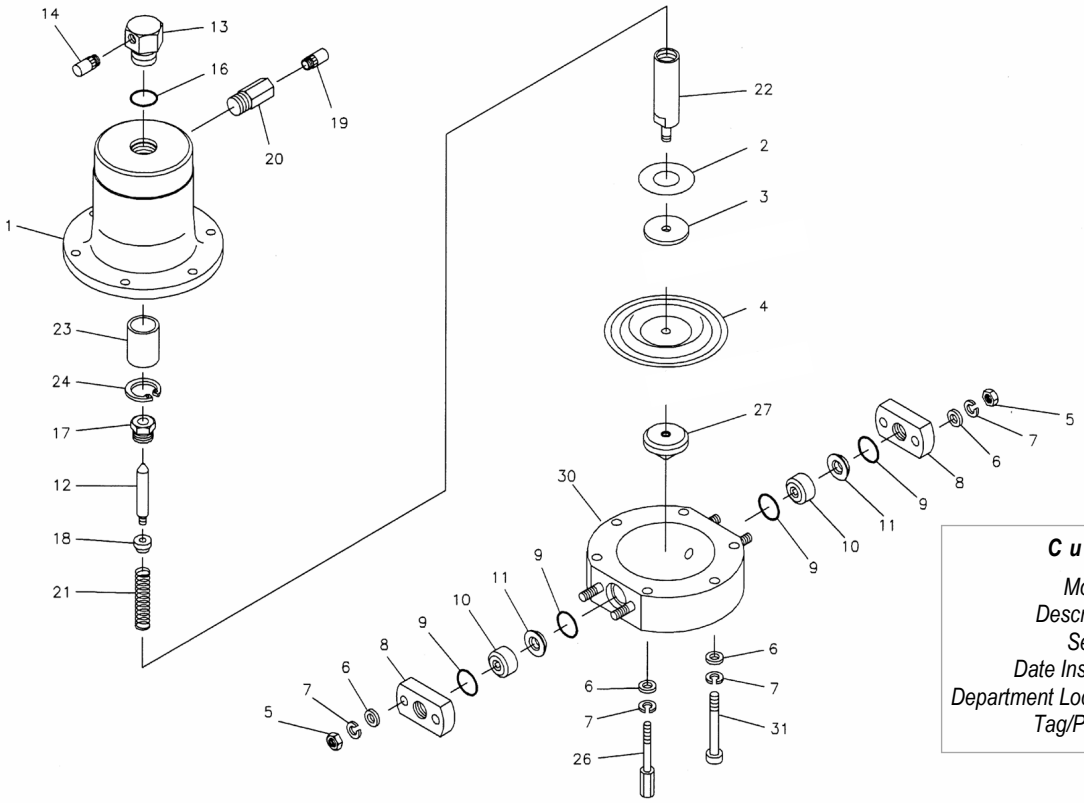

Customer Notes

Model #: _____
Description: _____
Serial #: _____
Date Installed: _____
Department Location: _____
Tag/Project: _____

©2023 Yamada America, Inc.